| MALE END VIEW | FEMALE END VIEW |
|---|---|
| 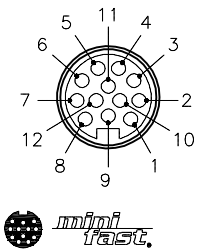 | 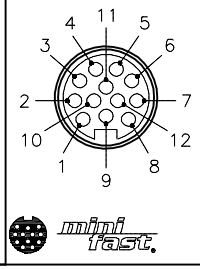 |
| 1 = BROWN<br>2 = BLUE<br>3 = WHITE<br>4 = GREEN/YELLOW<br>5 = ORANGE<br>6 = YELLOW<br>7 = GRAY<br>8 = PINK<br>9 = RED<br>10 = BROWN/WHITE<br>11 = BLUE/WHITE<br>12 = GREEN/WHITE | 1 = BROWN<br>2 = BLUE<br>3 = WHITE<br>4 = GREEN/YELLOW<br>5 = ORANGE<br>6 = YELLOW<br>7 = GRAY<br>8 = PINK<br>9 = RED<br>10 = BROWN/WHITE<br>11 = BLUE/WHITE<br>12 = GREEN/WHITE |

## SPECIFICATIONS

| | |
|---|---|
| CONTACT CARRIER MATERIAL/COLOR | TPU/YELLOW |
| MOLDED HEAD MATERIAL/COLOR | TPU/YELLOW |
| CONTACT MATERIAL/PLATING | BRASS/GOLD |
| COUPLING NUT MATERIAL/PLATING | BRASS/NICKEL |
| RATED CURRENT [A] | 7.0 A |
| RATED VOLTAGE [V] | 300 V |
| OUTER JACKET MATERIAL/COLOR | PVC/YELLOW |
| CONDUCTOR INSULATION MATERIAL | PVC |
| NUMBER OF CONDUCTORS | 12x18 AWG |
| DRAIN/SHIELD | 20 AWG/POLYESTER FOIL |
| TEMPERATURE RATING | −40˚C to +105˚C (−40˚F to +221˚F) |
| PROTECTION CLASS | MEETS NEMA 1,3,4,6P AND IEC IP68 |

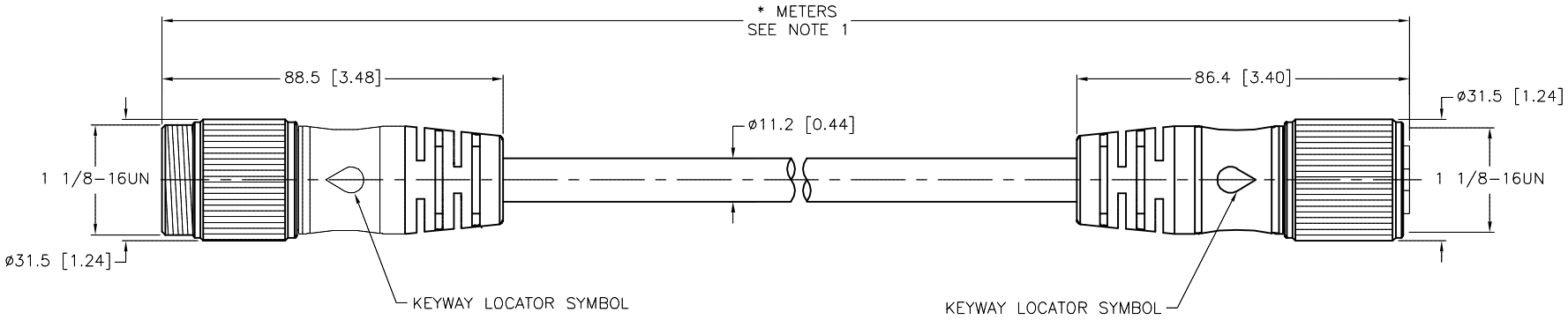


| CABLE LENGTH | TOLERANCE * |
|---|---|
| ALL LENGTHS | + 4% (OR 50mm) OF LENGTH<br>− 0% (OR 0mm) OF LENGTH<br>WHICHEVER IS GREATER |
| **STRIP LENGTH** | **TOLERANCE *** |
| 0–7mm | ±0.5mm |
| 8–29mm | ±1.0mm |
| 30–49mm | ±2.0mm |
| 50–69mm | ±3.0mm |
| 70–100mm | ±4.0mm |
| OVER 100mm | ±5.0mm |
| *** UNLESS OTHERWISE SPECIFIED** | |

NOTES:

1. "*" INDICATES CABLE LENGTH IN METERS. CONTACT TURCK TO ORDER SPECIFIC LENGTHS.

2. "/S817" DESIGNATES SPECIAL CABLE WITH CUSTOM WIRING.

**SOURCE DRAWING - FOR REFERENCE ONLY**

| REV | DESCRIPTION | BY | DATE | ECO NO. |
|---|---|---|---|---|
| D | UPDATE CABLE OD | NF | 08/23/16 | 40654 |

RELATED DOCUMENTS
1.
2.
3.
4.

3RD ANGLE PROJECTION

THIS DRAWING IS CONFIDENTIAL AND THE PROPERTY OF TURCK INC. USE OF THIS DOCUMENT WITHOUT WRITTEN PERMISSION IS PROHIBITED.

TURCK

3000 CAMPUS DRIVE
MINNEAPOLIS, MN 55441
1-800-544-7769
(763) 553-7300
(763) 553-0708 fax
www.turck.us

MATERIAL: SEE SPECIFICATIONS

FINISH: SEE SPECIFICATIONS

ALL DIMENSIONS DISPLAYED ON THIS DRAWING ARE FOR REFERENCE ONLY

CONTACT TURCK FOR MORE INFORMATION

DRFT: RDS | DATE: 09/24/09
APVD: | SCALE: 1=1.8

UNIT OF MEASUREMENT
**MILLIMETER [ INCH ]**
DO NOT SCALE THIS DRAWING

DESCRIPTION: RSM RKM 120-*M/S817

IDENTIFICATION NO.:

REV: D

FILE: 777025311 | SHEET 1 OF 1